Three-Level LLC Series Resonant DC/DC Converter

Yilei Gu, Zhengyu Lu, *Senior Member, IEEE*, Lijun Hang, Zhaoming Qian, *Senior Member, IEEE*, and Guisong Huang

***Abstract*—Paper presents a three-level soft switching LLC series resonant dc/dc converter. Zero-voltage switching (ZVS) is achieved for each main switch without any auxiliary circuit. Voltage stress of each main switch is half of input voltage. Zero-current-switching (ZCS) is achieved for rectifier diodes. Wide input/output range can be achieved under low frequency range because of two-stage resonance. Only one magnetic component is required in this converter. Efficiency is higher in high line input, so this converter is a preferable candidate for power products with the requirement of hold up time. For design convenience, relationship between dc gain and switching frequency, load resistance is deduced. Its open load characteristic and short load characteristic are exposed to provide theory basis for no load operation and over current protection. Design consideration of four dead times is presented to assure that voltage stress for main switches is within half of input voltage and ZVS for each main switch is achieved. Finally the principle of operation and the characteristics of the presented converter are verified on a 500 V–700 V input 54 V/10 A output experimental prototype, whose efficiency reaches 94.7% under rating condition.**

***Index Terms*—Hold-up time, resonant converter, three-level.**

I. Introduction

EMPLOYING high frequency MOSFET as main switch and achieving soft switching are two key means to realize the requirement of small size in modern power products. However, the trouble of high cost and low performance for high voltage MOSFET appears on ultrahigh voltage input occasions, such as dc/dc converters after three-phase power factor correction (PFC).

Various kinds of three-level dc/dc topologies, whose voltage stress of main switch is half of input voltage, are proposed in the recent ten years [1]–[6]. It must be pointed out that a practical three-level dc/dc converter should own soft switching performance because three-level technique is applied in high input voltage occasion, in which switching loss is quite high if soft switching is not achieved based upon the precondition of high frequency. A lot of soft switching three-level half-bridge dc/dc converters are presented till now. However the flowing disadvantages exist in them. First, Auxiliary circuits are applied to achieve soft switching and cost is added or other performance of the converter decays. Secondly, there is a contradiction between input voltage range and conversion efficiency. On the one side, circuit parameters should be selected to satisfy low line input when input voltage range is wide. On the other side, duty cycle is rather small and conversion efficiency is low in high line input. Third, reverse recovery problem of rectifier diodes lowers the performance of conventional three-level half-bridge dc/dc converters. Not only additional loss is added but also voltage spike at rectifier diodes appears, which adds trouble to designer.

The problems above can be easily solved in the LLC series resonant dc/dc converter [7]–[11]. Zero-voltage switching (ZVS) is achieved for each main switch without any auxiliary circuit. Zero-current-switching (ZCS) is achieved for rectifier diodes and no voltage spike appears. Wide input/output range can be achieved under low frequency range because of secondary resonant. Efficiency is higher in high line input, so this converter is fit for power products with the requirement of hold up time. In addition, structure of the very topology is very simple and only one magnetic component is required in this converter. While voltage stress of LLC resonant converter is input voltage and therefore is not appropriate to ultrahigh input voltage occasions.

In [12], a fixed frequency three-level LLC resonant converter is proposed. The advantage of the topology is fixed frequency and wide input voltage. However, six switches (four in primary side, two in secondary side) are included in the very topology, which result in both complex structure and high cost. The two switches in secondary side will result in high loss, especially in high output voltage applications. In addition, similar to other PWM converters, the efficiency is lower in high line input than in low line input, which is disadvantageous to hold up time applications. Finally, voltages of S1–S4 cannot be clamped at half of input voltage, if There are some tiny difference among driving circuits or among parasitic capacitors of S1–S4 in practical applications.

In this paper, a variable frequency three-level LLC series resonant dc/dc converter possessing the advantages of both LLC series resonant converter and three-level converter is proposed. For providing reference convenience to the designers, relationship between dc gain and switching frequency, load resistance is deduced. Its open load characteristic and short load characteristic are exposed to provide theory basis for no load operation and over current protection as well. Design consideration for four dead times is presented to assure that voltage stress for main switches is within half of input voltage and ZVS for each main switch is achieved.

II. Operational Principle

Fig. 1 shows the proposed three-level LLC series resonant dc/dc converter. Four main switches, S_1, S_2, S_3, S_4 are connected in series and form a three-level half- bridge structure

Manuscript received October 15, 2003; revised December 8, 2004. This paper was presented in part at APEC'04, Anaheim, CA, February 22–26, 2004. This work was supported by the Delta Power Electronics Power Center and the National Natural Science Foundation of China under Contract 50237-030ZD. Recommended by Associate Editor Y.-F. Liu.

Y. Gu, Z. Lu, L. Hang, and Z. Qian are with the College of Electrical Engineering, Zhejiang University, Hangzhou 310027, China (e-mail: dsp1@zju.edu.cn; guyilei9602@hotmail.com).

G. Huang is with the Delta Power Electronics Center, Shanghai 201209, China.

Digital Object Identifier 10.1109/TPEL.2005.850921

0885-8993/$20.00 © 2005 IEEE

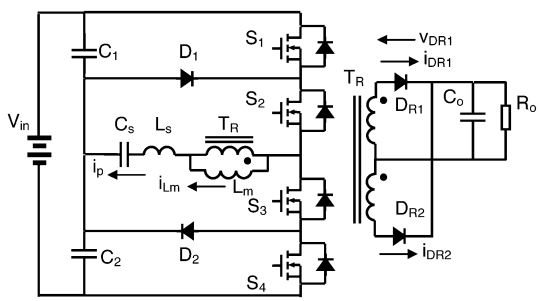

Fig. 1. Three-level LLC resonant dc/dc converter.

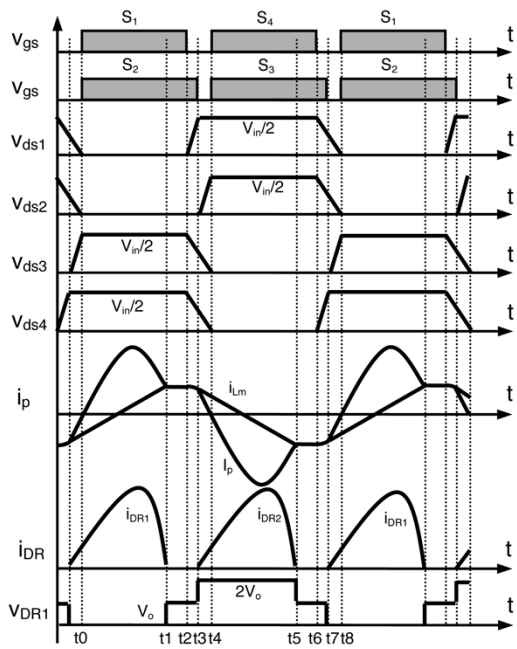

Fig. 2. Principle waveform of the proposed converter.

together with two series capacitors. Leakage inductor L_s, magnetizing inductor L_m, and resonant capacitor C_s form a resonant tank, which is connected between the center point of half-bridge and the center of series capacitors. Compared the configuration of the very topology with the traditional half-bridge converters, the distinction is not obvious, except that no filter inductor is included on the secondary side of the presented three-level LLC series topology. While different driving signal and different modulation method make it far different from the conventional ones.

Four driving signals are shown in Fig. 2. Driving signal of S_1 is basically the same as that of S_2, but is turned off a little earlier than S_2. Driving signal of S_3 is basically the same as that of S_4, but is turned off a little later than S_4. Referring to the figure, S_1 and S_2 and S_3 and S_4 are respectively driven complementary and their duty cycles all constantly equals to 50%. The prominent feature of the very topology is output voltage is modulated by switching frequency not duty cycle. Voltage stress of S1 and S_4 are clamped to half of input voltage by D_1 and D_2 after being turned off. S2 and S3 share the other half input voltage. D_{R1} and D_{R2} form a center-tapped rectifier, which is connected to output capacitor C_o directly.

For the convenience of analysis, it is assumed that the circuit operation is in steady state, the output capacitor is large enough to be considered as a voltage source V_o, the two series input capacitors are large enough to be considered as two voltage sources $V_{\mathrm{in}}/2$, all the devices are ideal and main switches are all MOSFET with parasitic diode. Referring to the timing diagram as shown in Fig. 2, the proposed converter has eight operation stages during a switching cycle, whose corresponding equivalent circuit for each operation stage is shown in Fig. 3 and their operating process is described in detail as follows.

Stage 1 [t0, t1]: S_1 and S_2 are turned on simultaneously at the moment of t0. The primary resonant current i_p flows through S_1 and S_2 and increases in sine-wave mode due to the resonance between L_s and C_s. D_{R1} is turned on and secondary side winding of transformer is clamped by output voltage. So, the magnetizing current i_{Lm} increases linearly from negative to positive peak. The output current is directly proportional to the difference between resonant current i_p and magnetizing current i_m, which is illustrated both in the seventh and eighth waveform in Fig. 2.

Stage 2 [t1, t2]: With the decline of primary resonant current and increase of magnetizing current, they equal to each other at the moment of t1, simultaneously secondary current decreases to zero and correspondingly the secondary diode D_{R1} is turned off naturally. Therefore, both reverse recovery and voltage spike of the rectifier diodes can be avoided, therefore reverse voltage across D_{R1} is output voltage, V_o, when it is reverse blocking. According to the above analysis, ZCS operation condition for diodes is achieved. L_m becomes a free inductor since output voltage does not clamp the windings of transformer, resonance between C_s and $(L_m + L_s)$ occurs. This resonant cycle is much longer than the previous one because L_m is much larger than L_s. It can be recognized that L_m is a constant current source if this stage is comparatively short compared with the resonant period of the very resonant tank.

Stage 3 [t2, t3]: At the moment of t2, S_1 is turned off and S_2 keeps on conducting, therefore the voltage across S_3 and S_4 begins to decrease. Primary current freewheels through D_1. At the same time, voltage across DS of S_1 is clamped at $V_{\mathrm{in}}/2$. Actually, the interval of t2–t3 is very short.

Stage 4 [t3, t4]: S2 is turned off at the moment of t3, and thus primary current discharges the output capacitors of S_3 and S_4 and then is transferred to circulate through S_3 and S_4. Parasitical diodes of S_3 and S_4 are turned on after voltages of output capacitors are discharged to zero, and ZVS conditions for S_3 and S_4 are created. At this moment, total voltage across S_1 and S_2 is V_{in}, while voltage across S_1 is $V_{\mathrm{in}}/2$, therefore the other half input voltage is shared by S_2. This is the primary motive of presentation of three-level dc/dc topologies—voltage stress of each main switch is half of input voltage. According to the above analysis, the requirement of reduce of voltage stress for main switches is satisfied.

Operation principles of stage 5–8, whose equivalent circuits are also shown in Fig. 3, are similar to stage 1–4 and will not described detailedly here. From the above analysis, it can be seen that ZVS is achieved for $S_1 \sim S_4$ and voltage stress for each of them is half of input voltage. ZCS is achieved for secondary diodes $D_{\mathrm{R1}} \sim D_{\mathrm{R2}}$, almost no reverse recovery and no

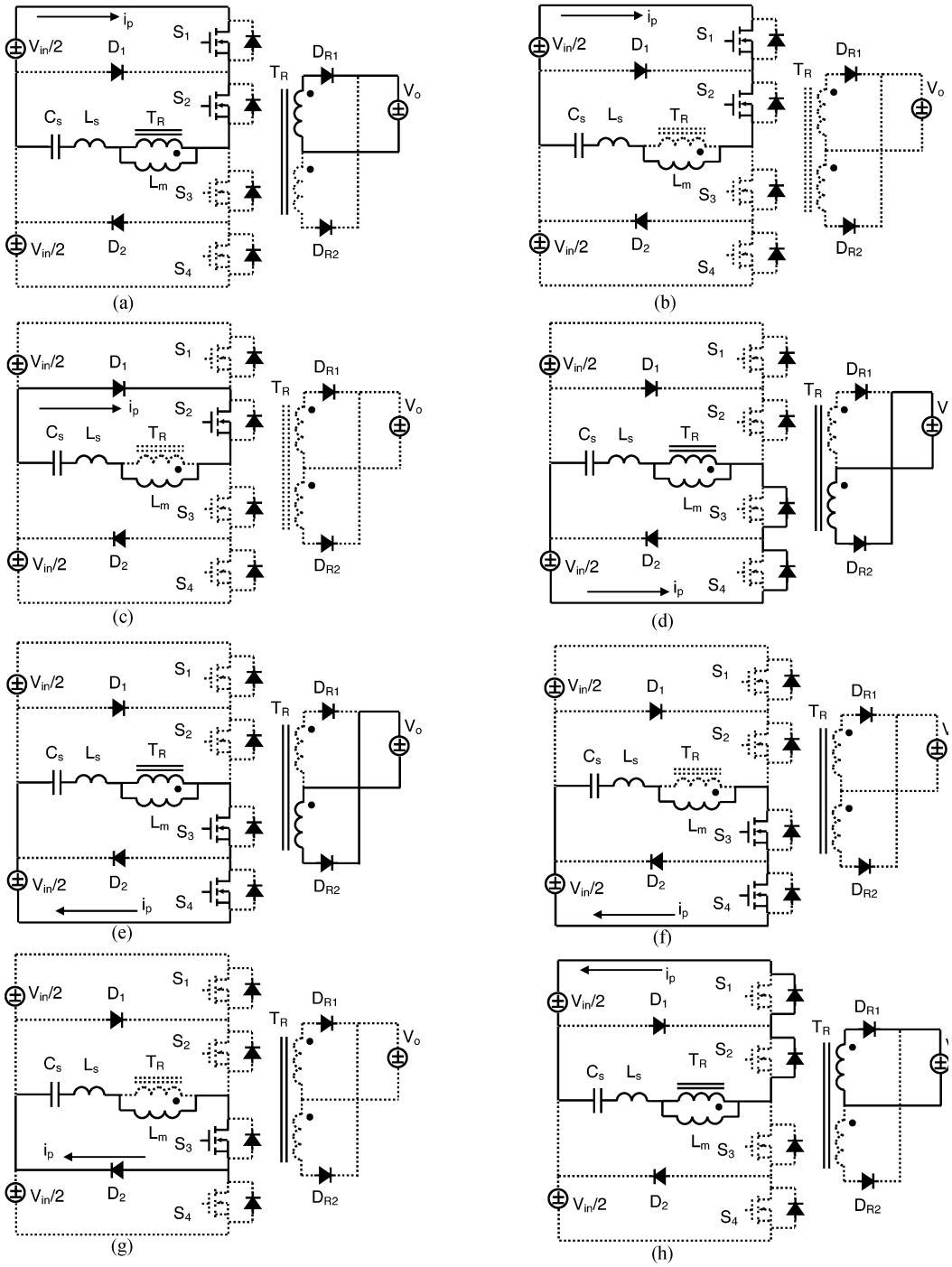

Fig. 3. Equivalent circuit for each stage: (a) Stage1 [t0, t1], (b) Stage2 [t1, t2], (c) Stage3 [t2, t3], (d) Stage4 [t3, t4], (e) Stage5 [t4, t5], (f) Stage6 [t5, t6], (g) Stage7 [t6, t7], and (h) Stage8 [t7, t8].

voltage spike occurs. Voltage stresses of D_{R1} and D_{R2} are twice of output voltage.

III. Basic Performance Analysis

For analysis convenience, the resonant frequency of C_s and L_s in series was defined as f_s

$$f_s = \frac{1}{\left(2\pi\sqrt{L_s C_s}\right)}. \tag{1}$$

The resonant frequency of C_s, L_s and L_m in series was defined as f_m

$$f_m = \frac{1}{\left(2\pi\sqrt{(L_s + L_m)C_s}\right)}. \tag{2}$$

The maximum magnetizing current $\mathbf{I}_m$ can be expressed as

$$I_m = \frac{nV_o}{4L_m f_s}. \tag{3}$$

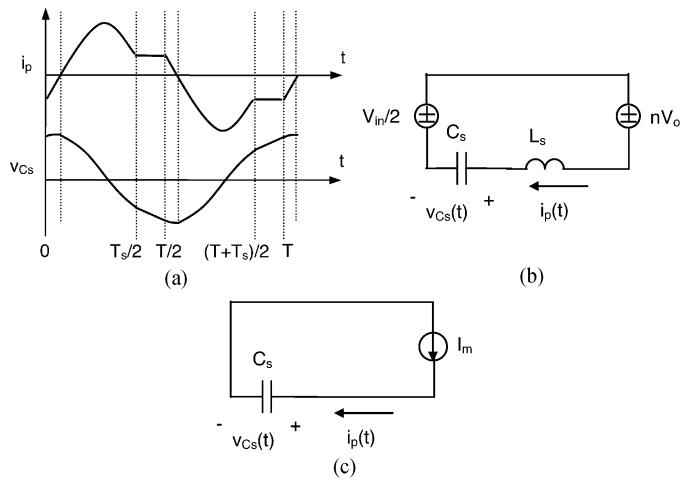

Fig. 4. Simplified equivalent circuits and principle waveforms: (a) principle waveforms, (b) equivalent circuit when $0 < t < Ts/2$, and (c) equivalent circuit when $Ts/2 < t < T/2$.

Wherein, L_m is magnetizing inductance; n is the turn ratio from primary side to secondary side.

The description of the eight operation stages above aims at the case of $f < f_s$. When $f = f_s$, stage 2 and stage 6 disappear and primary current is perfect sine wave. This operation mode is called pure resonance mode, however it is called over resonance when $f < fs$.

Relationship between input voltage and output voltage is modulated by operation frequency. Actually it is modulated by the over resonant time. L_m can be regarded as a boost inductor. Voltage across the resonant capacitor is increased by the boost inductor and output voltage is also increased if over resonant time is prolonged.

If resonant current maintains constant during the time interval of t2–t3 and t5–t6, and all the dead times are ignored, equivalent circuits and principle waveform can be simplified, which is shown in Fig. 4.

According to the equivalent circuit when $0 < t < Ts/2$, $i_p(t)$ and $v_{Cs}(t)$ can be expressed as

$$i_p(t) = I_p \sin(\omega_s t - \phi) \tag{4}$$

$$v_{Cs}(t) = V_{C_s} \cos(\omega_s t - \phi) + nV_o - \frac{V_{\text{in}}}{2}. \tag{5}$$

According to (0.2), the following equations can be deduced:

$$v_{Cs}(0) = V_{C_s} \cos\phi + nV_o - \frac{V_{\text{in}}}{2} \tag{6}$$

$$v_{Cs}\left(\frac{T_s}{2}\right) = -V_{C_s} \cos\phi + nV_o - \frac{V_{\text{in}}}{2}. \tag{7}$$

According to the symmetry of the waveform of v_{Cs}, the following equation can be achieved:

$$v_{Cs}(0) = -v_{Cs}\left(\frac{T}{2}\right). \tag{8}$$

According to the equivalent circuit when $Ts/2 < t < T/2$, $ip(t)$ and $v_{Cs}(t)$ can be expressed as

$$v_{Cs}\left(\frac{T}{2}\right) = v_{Cs}\left(\frac{T_s}{2}\right) - \frac{I_m(T - T_s)}{2C_s}. \tag{9}$$

According to (6)–(9), output voltage V_o can be expressed as

$$V_o = \frac{1}{2n} V_{\text{in}} + \frac{I_m}{4nC_s}(T - T_s). \tag{10}$$

Wherein V_{in} is input voltage; T is operation period; T_s is resonant period of C_s and L_s and defined as

$$T_s = 2\pi\sqrt{C_s L_s}. \tag{11}$$

In expression (10), it is indicated that output voltage can be increased when operation period is increased. When $T = \text{Ts}$, output voltage can be expressed as

$$V_o = \frac{1}{2n} V_{\text{in}}. \tag{12}$$

Output current of secondary rectifier $(\mathbf{i}_{\text{D1}} + \mathbf{i}_{\text{D2}})$ is critically continuous in this condition and its RMS reaches to minimum. Therefore, conduction loss of the converter reaches to minimum and the converter operates on the state of best conversion efficiency. Equation (12) can be regarded as the optimal operation condition.

When input voltage decreases, operation period, T is required to increase to higher than T_s to maintain the constant output V_o. The input voltage can be lower than the optimal condition. According to the previous paragraph, it is a prominent feature different from PWM converters that the efficiency of three-level LLC series resonant converter is optimum at high line when input voltage range is wide, which is very attractive for the requirement of hold up time occasions.

According to (3), (10), (11), the following equation can be obtained.

$$\frac{V_{\text{in}}}{2nV_o} = 1 + \frac{\pi^2}{4}\frac{L_s}{L_m}\left(1 - \frac{f_s}{f}\right). \tag{13}$$

It is indicated that adjustable range of input voltage is relative to L_s/L_m. Therefore, L_s/L_m can be flexibly designed according to desirable input voltage range.

The operation mode that switching frequency is lower than resonant frequency is analyzed above. When operation frequency is higher than resonant frequency, which is called under resonance, operation principle of the very topology is similar to conventional series resonant converter and the merit of L_m is submerged. So, the proposed three-level LLC resonant converter can also be comprehended as extending of conventional series resonant converter, within operation range being widened. However, secondary diodes can't operate under ZCS condition and voltage spike will occur when it runs in the under resonance mode. In addition, empty load performance is poor and dead load is required. Therefore under resonance mode is not proposed unless required input voltage range is ultra-wide.

IV. Open Load and Short Load Characteristic Analysis

However (13), which shows the relationship between dc gain and switching frequency that can explain the operation principle of over resonance, pure resonance, and under resonance, doesn't contain the information of impact of the load on dc gain, though dc gain, in fact, changes very slight when load varies. Therefore open load and short load characteristic cannot be deduced from

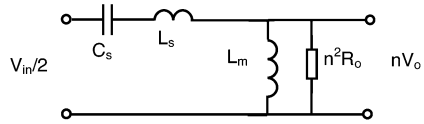

Fig. 5. Equivalent circuit.

(13). In the following text, according to the approximate equivalent circuit of three-level LLC series resonant dc/dc converter, relationship between dc gain and switching frequency, load is concluded, furthermore both open load and short load characteristic are obtained.

Provided that the switching frequency approaches to the resonant frequency, the voltage across the primary winding can be approximately regarded as symmetrical square waveform with the magnitude of nV_o, and that the symmetrical square waveform whose magnitude is $V_{\rm in}/2$ is applied to the whole resonant net containing C_s, L_s, L_m. therefore the equivalent circuit can be approximately figured as shown in Fig. 5.

The following equation can be concluded from the previous equivalent circuit:

$$\frac{nV_o}{\frac{V_{\rm in}}{2}} = \left| \frac{\frac{j\omega L_m n^2 R_o}{j\omega L_m + n^2 R_o}}{\frac{1}{j\omega C_s} + j\omega L_s + \frac{j\omega L_m n^2 R_o}{j\omega L_m + n^2 R_o}} \right|. \tag{14}$$

After being settled, it also can be expressed as follows:

$$\frac{nV_o}{\frac{V_{\rm in}}{2}} = \frac{1}{\sqrt{\left(\frac{\omega^2-\omega_m^2}{\omega^2 L_m C_s \omega_m^2}\right)^2 + \left(\frac{\omega_s^2-\omega^2}{\omega C_s n^2 R_o \omega_s^2}\right)^2}}. \tag{15}$$

Wherein, $\omega_s = 1/\sqrt{L_s C_s}$ is defined as the characteristic resonant angle frequency of LC, and correspondingly $\omega_m = 1/\sqrt{(L_m + L_s)C_s}$ is defined as the characteristic resonant angle frequency of LLC.

For the convenience of expression standardization, definitions are made as follows:

$$\text{Normalized angle frequency } \omega^* = \frac{\omega}{\omega_s}$$
$$\text{Normalized load resistor } r^* = \frac{n^2 R_o}{\omega_s L_s}$$
$$\text{Resonant inductor ratio } h = \frac{L_m}{L_s}.$$

By utilizing the previously defined parameters, (15) can also be expressed as follows:

$$M(h, r^*, \omega^*) = \frac{nV_c}{\frac{V_{\rm in}}{2}} = \frac{1}{\sqrt{\left(1 + \frac{1}{h} - \frac{1}{\omega^{*2} h}\right)^2 + \frac{1}{r^{*2}}\left(\frac{1}{\omega^*} - \omega^*\right)^2}}. \tag{16}$$

Only three variables h, r^*, ω^*, are contained in the above expression and the resonant inductor ratio h is chosen during design process, therefore only the information of relation between dc gain and the switching frequency, load is transferred in it. Assuming h =4, three dimension relation of the above expression is indicated in Fig. 6. dc gain relative to switching frequency variation is not monotonous, therefore the full frequency range can be divided into two sections, which contain high frequency monotonous section and low frequency monotonous section. The converter can be designed only in one of two monotonous sections, usually three-level LLC resonant dc/dc converter operates in high frequency monotonous section. In practical applications, frequency range of high frequency monotonous section can be calculated by computers according to (16).

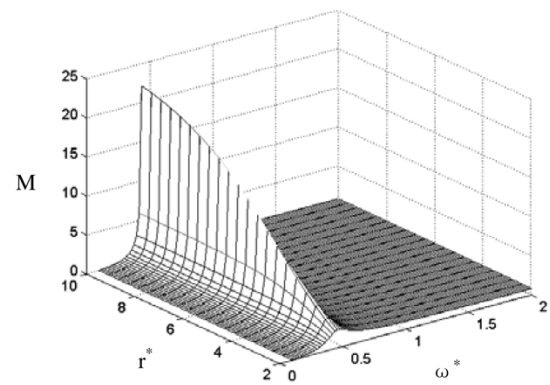

Fig. 6. M versus r^* and ω^*.

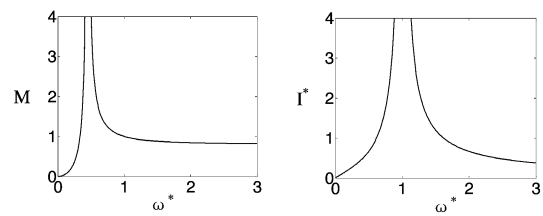

Fig. 7. Characteristics of open circuit and short circuit: (a) open circuit and (b) short circuit.

When the load for the converter is open, namely $r^* = \infty$, dc gain M can be expressed as follows:

$$M(h, r^*, \omega^*) = \frac{nV_o}{\frac{V_{\rm in}}{2}} = \left| \frac{1}{1 + \frac{1}{h} - \frac{1}{\omega^{*2} h}} \right|. \tag{17}$$

The relation between M and ω^*, when $h = 4$, is shown in Fig. 7(a). dc gain decreases when the switching frequency increases in high frequency monotonous section, therefore stability of output voltage can be assured by increasing the switching frequency when the load of the converter is open. In addition, it is obvious that the minimum value of dc gain for open load can be obtained when the normalized angle frequency is tend to infinite. According to the limit operation regulation, the minimum value can be concluded

$$M_{\min} = \frac{h}{1+h}. \tag{18}$$

Therefore the minimum dc gain must be designed to exceed this value.

Normalized output current is defined as

$$I^* = \frac{2nV_o}{r^* V_{\rm in}}. \tag{19}$$

Put (10) into (13), the following equation can be obtained:

$$I^* = \frac{1}{\sqrt{r^{*2}\left(1+\frac{1}{h}-\frac{1}{\omega^{*2}h}\right)^2+\left(\frac{1}{\omega^*}-\omega^*\right)^2}}. \quad (20)$$

When the load of this converter is shorted, namely $r^* = 0$, expression (14) is modified as

$$I^* = \left|\frac{\omega^*}{1-\omega^{*2}}\right|. \quad (21)$$

Fig. 7(b) indicates the relation of I^* and ω^* when the load is shorted. It is illustrated that the expected limit current can be obtained only by increasing the switching frequency to some extent when load is shorted. In terms of this operation principle the protection circuit of over current or shorted circuit can be easily designed to assure the practicability of this converter.

V. Design Consideration for Dead Times

The design of four critical dead times of the converter in one operation period is the key due to its important effect on both the limitation of voltage stress on main switches and realization of ZVS. Four dead times are defined as

$$\begin{aligned} t_{\text{dead1}} &= t_3 - t_2, \\ t_{\text{dead2}} &= t_4 - t_3, \\ t_{\text{dead3}} &= t_7 - t_6, \\ t_{\text{dead4}} &= t_8 - t_7. \end{aligned}$$

In addition, it is assumed that output capacitors of S1–S4 are respective $C_{\text{oss1}} \sim C_{\text{oss4}}$.

According to the operation principle of three-level LLC series resonant dc/dc converter, S_1 must be turned off, by time of t_{dead1}, earlier than S2 and correspondingly S3 must be turned off, by time of t_{dead3}, earlier than S4 in order to assure that the voltage stress of each main switch is the half of the input voltage. Provided that output capacitors of main switches, i.e., $C_{\text{oss1}} \sim C_{\text{oss4}}$, are equal to each other, it is only required that t_{dead1} and t_{ead3} are both larger than zero. Actually $C_{\text{oss1}} \sim C_{\text{oss4}}$ can't be roughly equal to each other, in addition, for reliability, t_{dead1} and t_{ead3} are designed to satisfy the following condition. The voltage across S_1 reaches $V_{\text{in}}/2$ before the moment of t3, i.e., D_1 turns on before t3; the same case as S_1, before the moment of t7 the voltage across S_4 reaches $V_{\text{in}}/2$, i.e., D_2 turns on before t7. In order to satisfy this condition, the following two expressions can be utilized to design the dead times of t_{dead1} and t_{dead3}

$$I_m t_{\text{dead1}} \geq \left(C_{\text{oss1}} + \frac{C_{\text{oss3}}C_{\text{oss4}}}{C_{\text{oss3}}+C_{\text{oss4}}}\right)\frac{V_{\text{in}}}{2} \quad (22)$$

$$I_m t_{\text{dead3}} \geq \left(C_{\text{oss4}} + \frac{C_{\text{oss1}}C_{\text{oss2}}}{C_{\text{oss1}}+C_{\text{oss2}}}\right)\frac{V_{\text{in}}}{2}. \quad (23)$$

Provided that t_{dead1} and t_{dead3} are designed in terms of the previously proposed method, then ZVS for main switches S_3 and S_4 is achieved by the following operation course: the magnetizing current circulating through the magnetizing inductance charges the junction capacitor of S_2, simultaneously discharges the junction capacitors of S_3 and S_4. Limit condition for achieving ZVS for S_3 and S_4 is expressed as follows (limit condition means that the boundary condition for achieving ZVS while it is assumed that dead time is infinite):

$$\frac{1}{2}L_m I_m^2 \geq \frac{1}{8}C_{\text{oss2}}V_{\text{in}}^2 + \frac{C_{\text{oss3}}C_{\text{oss4}}}{8(C_{\text{oss3}}+C_{\text{oss4}})}V_{\text{in}}^2. \quad (24)$$

Put (3) into (24), the expression of limit condition for realizing ZVS of S3 and S4 can be further modified as

$$\frac{n^2V_o^2}{32L_m f_s^2} \geq \frac{1}{8}C_{\text{oss2}}V_{\text{in}}^2 + \frac{C_{\text{oss3}}C_{\text{oss4}}}{8(C_{\text{oss3}}+C_{\text{oss4}})}V_{\text{in}}^2. \quad (25)$$

Similarly the following expression declaring the limit condition for achieving ZVS both for S_1 and S_2 can be obtained:

$$\frac{n^2V_o^2}{32L_m f_s^2} \geq \frac{1}{8}C_{\text{oss3}}V_{\text{in}}^2 + \frac{C_{\text{oss1}}C_{\text{oss2}}}{8(C_{\text{oss1}}+C_{\text{oss2}})}V_{\text{in}}^2. \quad (26)$$

VI. Experimental Results

An experimental prototype was built in order to verify the operation principle and advantages of proposed three-level LLC series resonant dc/dc converter. The specifications of the prototype are specified as follows:

V_{in}	500 V–700 V;
V_o	54 V;
I_o	0–10 A;
$f_{\min}$	88 kHz;
f_s	150 kHz.

The power stage shown in Fig. 1 consists of the following components:

S_1, S_2, S_3, S_4	IRFP460;
$D_{\text{R1}}, D_{\text{R2}}$	30CPQ150;
T_r	$n = 74{:}10 + 10$, $L_m = 540\ \mu$H, $L_s = 98\ \mu$H;
Cs	13.2 nF.

Fig. 8 shows the main experimental waveforms. Figs. 8(a) and (b) shows drain-to-source voltage, V_{ds}, across S_2 and its gate signal voltage (upper trace) under 600-V input, at full load (10 A) and light load (1 A), respectively. It can be seen that maximum voltage stress for S_2 is about 300 V, just half of input voltage. Referring to the waveforms, it is illustrated that voltage across switches falls to zero prior to the appearance of the gate signal as well. Therefore, ZVS action is achieved both at full load and light load operation. And the phenomena of other switches are similar, which will not be shown here. Fig. 8(c) shows both primary side voltage (upper trace) and secondary side voltage of transformer. It can be seen that shapes of them are obviously different, because leakage inductor of transformer takes part in resonance. Fig. 8(d)–(f) shows resonant voltage (upper trace) and resonant current of primary side under 500-V, 600-V, 700-V input, respectively, at full load (10 A). It is obviously indicated that there are two resonant stages in every half switching period. First resonance takes place between C_s and L_s and the second resonance takes place between C_s and $(L_m + L_s)$. Fig. 8(g) and (h) shows resonant voltage (upper trace) and resonant current of primary side under 600-V input,

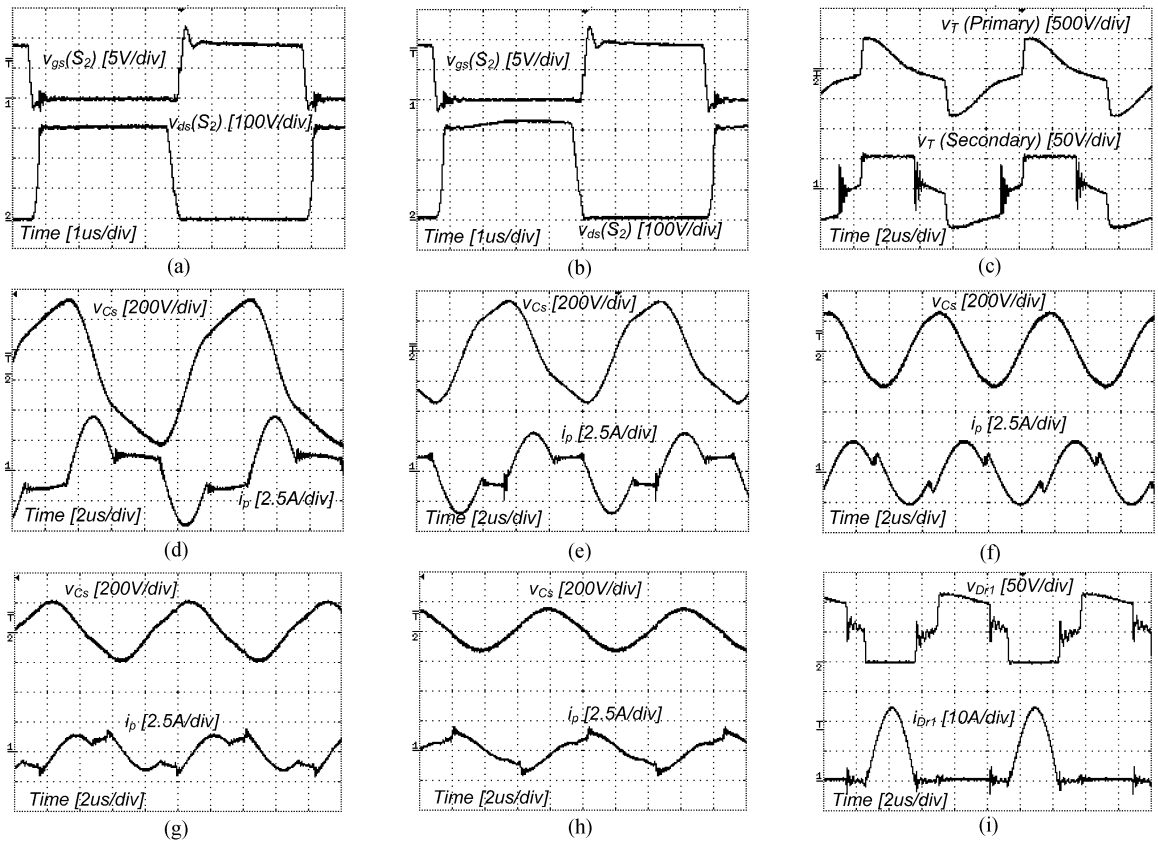

Fig. 8. Experimental waveforms: (a) $v_{\rm gs}$ and $v_{\rm ds}$ of $S_2(V_{\rm in} = 600$ V $I_o = 10$ A), (b) $v_{\rm gs}$ and $v_{\rm ds}$ of $S_2(V_{\rm in} = 600$ V $I_o = 1$ A), (c) transformer voltage ($V_{\rm in} = 600$ V $I_o = 10$ A), (d) resonant waveform ($V_{\rm in} = 500$ V $I_o = 10$ A), (e) resonant waveform ($V_{\rm in} = 600$ V $I_o = 10$ A), (f) resonant waveform ($V_{\rm in} = 700$ V $I_o = 10$ A), (g) resonant waveform ($V_{\rm in} = 600$ V $I_o = 5$ A), (h) resonant waveform ($V_{\rm in} = 600$ V $I_o = 1$ A), and (i) waveform of $D_{r1}(V_{\rm in} = 600$ V $I_o = 10$ A).

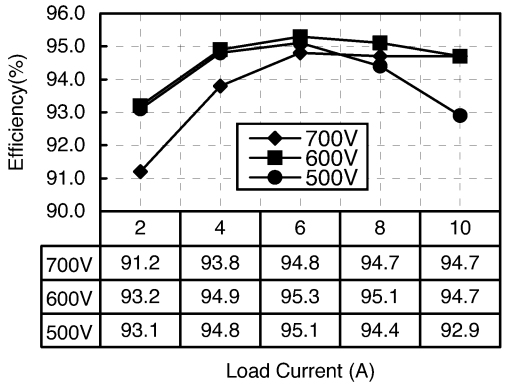

	2	4	6	8	10
700V	91.2	93.8	94.8	94.7	94.7
600V	93.2	94.9	95.3	95.1	94.7
500V	93.1	94.8	95.1	94.4	92.9

Fig. 9. Efficiency at different load current under 500-V, 600-V, 700-V input.

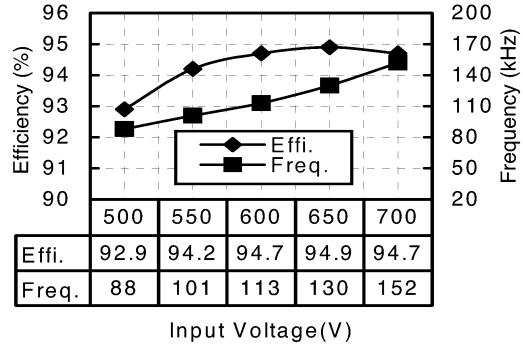

	500	550	600	650	700
Effi.	92.9	94.2	94.7	94.9	94.7
Freq.	88	101	113	130	152

Fig. 10. Efficiency and frequency at full load under different input voltage.

at 5 A, 1 A, respectively. Fig. 8(i) shows both voltage and current waveforms of $D_{\rm R1}$. It can be seen that $D_{\rm R1}$ turns off after current decreases to zero and no spike appears on voltage waveform. As shown in the figure, Voltage stress of $D_{\rm R1}$ is 108 V, which is only twice output voltage and therefore 150 V schottky can be used here. It can be seen from Figs. 8(e) and (i) that primary side current waveform is much different from secondary side current waveform because magnetizing inductor takes part in resonance.

Fig. 9 shows conversion efficiency at different load current under 500-V, 600-V, 700-V input. Maximum efficiency reaches 95.3% under 600-V input and efficiency is 94.7% at full load.

Fig. 10 shows relationship of efficiency and frequency at full load, whereas under different input voltage. In this experiment, switching frequency is design to be lower than f_s, RMS of current circulating through secondary side diodes is minimum when input voltage is maximum, so it can be seen that efficiency and frequency are higher under higher input voltage. Therefore, this converter is especially attractive to be applied in hold up time requirement occasion because efficiency is high at normal operation and only drops during hold up interval, which only lasts several mil-second, and thermal design is not influenced.

Fig. 11 shows theoretical and measured characteristics of input voltage versus switching frequency for various values of load resistance. It can be seen that shapes of the two curves

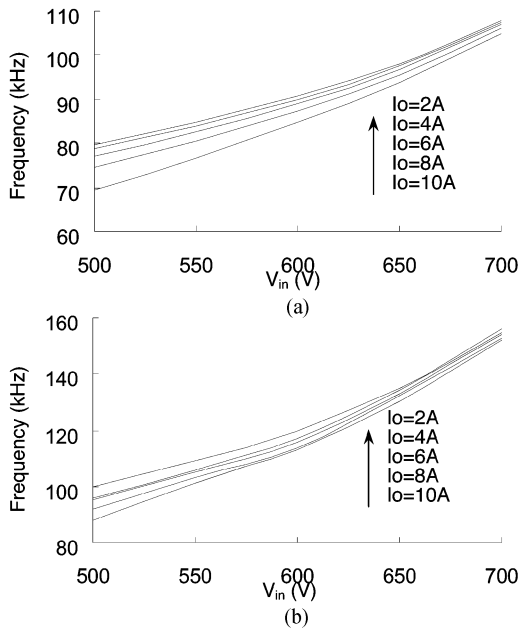

Fig. 11. Frequency versus $V_{\rm in}$ for various value of I_o.

TABLE I
MEASURED RMS VOLTAGE AND CURRENT STRESSES OF RESONANT COMPONENTS

V_{in}	V_{Cs}	I_{Cs}	V_T	I_T
500V	330V	2.4A	370V	2.4A
600V	230V	2.2A	384V	2.2A
700V	170V	1.85A	422V	1.85A

are accordant. But measured absolute value is higher than theoretical one because values of resonant inductor and resonant capacitor decline in high frequency operation.

Table I shows measured RMS voltage and current stresses of C_s and the transformer at full load. V_{Cs} and I_{Cs} are RMS voltage and current stresses of resonant capacitor respectively. V_T and I_T are RMS voltage and current stress of primary side of the transformer, respectively.

VII. CONCLUSION

Three-level LLC series resonant dc/dc converter presented in this paper has the following advantages.

1) ZVS is achieved for each main switch without any auxiliary circuit. Voltage stress of each main switch is half of input voltage.
2) ZCS is achieved for rectifier diodes and no voltage spike occurs.
3) Wide input/output range can be achieved under low frequency range because of two-stage resonance.
4) Efficiency is higher in high line input, so the presented converter is a preferable candidate for power products with the requirement of hold up time.
5) Structure of this topology is very simple and only one magnetic component is required in this converter.

It is an attractive topology, which can be applied in high input voltage, wide range occasions due to its high performance and low cost.

REFERENCES

[1] X. Ruan, B. Li, and Q. Chen, "Three-level converters—A new approach for high voltage and high power dc-to-dc converter," in *Proc. IEEE PESC'02*, 2002, pp. 663–668.
[2] X. Ruan, B. Li, and L. Zhong, "Zero-voltage-switching PWM three-level converter with current-doubler-rectifier," in *Proc. IEEE APEC'02*, 2002, pp. 981–987.
[3] X. Ruan, L. Zhou, and Y. Yan, "Soft-switching PWM three-level converters," *IEEE Trans. Power Electron.*, vol. 16, no. 5, pp. 612–622, Sep. 2001.
[4] F. Canales, P. M. Barbosa, and F. C. Lee, "A zero voltage and zero current switching three level dc/dc converter," in *Proc. IEEE APEC'00*, 2000, pp. 314–320.
[5] J. R. Pinheiro and I. Barbi, "The three-level ZVS PWM converter -A new concept in high-voltage DC-to-DC conversion," *Proc. IEEE IECON'92*, pp. 173–178, 1992.
[6] F. Canales, P. M. Barbosa, J. M. Burdio, and F. C. Lee, "A zero-voltage-switching three-level dc/dc converter," in *Proc. 22nd Int. Telecommunications Energy Conf. (INTELEC'00)*, vol. 3, Jun. 2000, pp. 512–517.
[7] G. Huang, A. J. Zhang, and Y. Gu, "LLC Series Resonant DC-to-DC Converter," U.S. Patent 6 344 979, Feb. 5, 2002.
[8] B. Yang, F. C. Lee, and M. Cancannon, "Over current protection methods for LLC resonant converter," in *Proc. IEEE APEC'03*, 2003, pp. 605–609.
[9] B. Yang, F. C. Lee, A. J. Zhang, and G. Huang, "LLC resonant converter for front end dc/dc conversion," in *Proc. IEEE APEC'02*, 2002, pp. 1108–1112.
[10] B. Yang, Y. Ren, and F. C. Lee, "Integrated magnetic for LLC resonant converter," in *Proc. IEEE APEC'02*, 2002, pp. 346–351.
[11] J. F. Lazar and R. Martinelli, "Stedy-state analysis of the LLC series resonant converter," in *Proc. IEEE APEC'01*, 2001, pp. 605–609.
[12] F. Canales, P. Barbosa, and F. C. Lee, "A wide input voltage and load output variations fixed-frequency ZVS dc/dc LLC resonant converter for high-power applications," in *Proc. 37th Industry Applications Soc. Annu. Meeting*, vol. 4, Oct. 2002, pp. 2306–2313.

Yilei Gu was born in Ningbo, China, in 1978. He received the B.S. degree in electrical engineering from Zhejiang University, Hangzhou, China, in 1999, where he is currently pursuing the Ph.D. degree in electrical engineering.

From 1999 to 2002, he was an Engineer with the Delta Power Electronics Center (DPEC), Shanghai, China, where he was engaged in research and development of dc/dc converters, soft-switching technique, synchronous rectifier technique, and ballast technique. He has authored or co-authored more than 30 published technical papers. He is the holder of seven US patents in the area of dc/dc converters and their applications. His research interests include topologies, power electronics system integration, and standard modules.

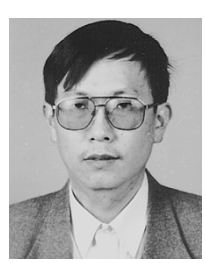

Zhengyu Lu (SM'04) received the B.S. degree in industrial automatic control from Hohai University, Nanjing, China, in 1982 and the Ph.D. degree in power electronics from Zhejiang University, Hangzhou, China, in 1987.

From 1996 to 1998, he was a Visiting Scholar and Researcher with the University of Birmingham, Birmingham, U.K., and the Imperial College, London, U.K. He is a Professor with Zhejiang University and Director of China National Power Electronics Laboratory. He has been doing teaching and research work on power electronic device and power converter for 20 years at Zhejiang University. Now, his main research interests include power converter, electrical track, vehicle electronics, electronics in FACTS application, and power electronics system integration.

Lijun Hang was born in Jiaxing, China, in 1979. She received the B.S. degree in electrical engineering from Zhejiang University, Hangzhou, China, in 2002, where she is currently pursuing the Ph.D. degree in electrical engineering.

She has authored or coauthored eight published technical papers. Her research interests include digital control in power electronics, and communication interface standard in power electronics system integration.

Zhaoming Qian (SM'92) received the M.S. degree in radio engineering from the Electrical Engineering Department, Zhejiang University, Hangzhou, China, in 1961 and the Ph.D. degree in applied science from the Interuniversity Microelectronics Center (IMEC), Catholic University of Leuven, Leuven, Belgium, in 1989.

Since 1961, he has been teaching and doing research work on electronics and power electronics with the Zhejiang University of China. He was promoted to Professor of the Electrical Engineering Department, Zhejiang University, in 1992. He is currently the Deputy Director of National Engineering Research Center for Applied Power Electronics, Zhejiang University, and the Deputy Director of the Scientific Committee, National Key Laboratory of Power Electronics, Zhejiang University. He has published one book on EMC design and more than 200 papers. His main professional interests include power electronics and its industrial applications, power electronic system integration, and EMC in power electronic systems, etc.

Dr. Qian received Excellent Education Awards from the China Education Commission and from Zhejiang University in 1993, 1997, and 1999, respectively, and Science and Technology Development Awards from the China Education Commission, in 1999 and 2003, respectively.

Guisong Huang was born in Chengdu, China, in 1970. He received the M.S. degree in physics from Peking University, Beijing, China, in 1996.

He is currently the Senior Engineer in Delta Power Electronics Center (DPEC), Shanghai, China, where he was engaged in research of soft-switching technique and synchronous rectifier technique, and development of dc/dc products. His research interests include topologies, power electronics system integration, and standard modules. He is the holder of five U.S. patents in the area of dc/dc converters and their applications.